Schöck Isokorb®
Materials for concrete-to-concrete applications

Schöck Isokorb®

Reinforcing steel	BSt 500 S acc. to EC 2 National Annex
Structural steel	S 235 JR
Stainless steel	Ribbed reinforcing steel BSt 500 NR: material no. 1.4362 or no. 1.4571 Tensile rebars: material no. 1.4362 (f_{yk} = 700 N/mm²) Plain rebars: material no. 1.4571, hardening level S 460,
Pressure bearings	HTE module (pressure bearings made of microfibre-reinforced high-performance fine concrete) PE-HD plastic jackets
Insulating material	Neopor®[1] hard foam (λ = 0.031 W/(m × K)), Polystyrene hard foam, λ = 0.035 W/(m × K)
Fire protection boards	Lightweight building boards, materials class A1, cement-bound fire safety boards, mineral wool: $\rho \geq 150$ kg/m³, Melting point T ≥ 1000 °C with integrated fire protection strips

Connecting components

Reinforcing steel	B500A, B500B or B500C acc. to BS 4449 or BS 4483
Concrete	Standard concrete acc. to BS EN 206-1 with a dry apparent density of 2000 kg/m³ to 2600 kg/m³ (lightweight concrete is not permissible) Concrete grade for outside components: At least C32/40, plus according to the environmental classification acc. to BS 8500 or acc. to EC 2 National Annex Concrete grade for inside components: At least C25/30, plus according to the environmental classification acc. to BS 8500 or acc. to EC 2 National Annex

Note concerning the bending of reinforcement steel

The production of Schöck Isokorb ® is carefully monitored at the factory to ensure that all bars are bent in accordance to our technical approval and EC2.

Caution: If original Schöck Isokorb ® rebars bent on site, or bent and bent back, the monitoring of compliance with regards the required condtions (technical approval, EC2) of such actions is not the responsibility of Schöck GmbH. Our warranty will be voided in such cases.

[1] Neopor® is a registered brand name of BASF

Schöck Isokorb® type K

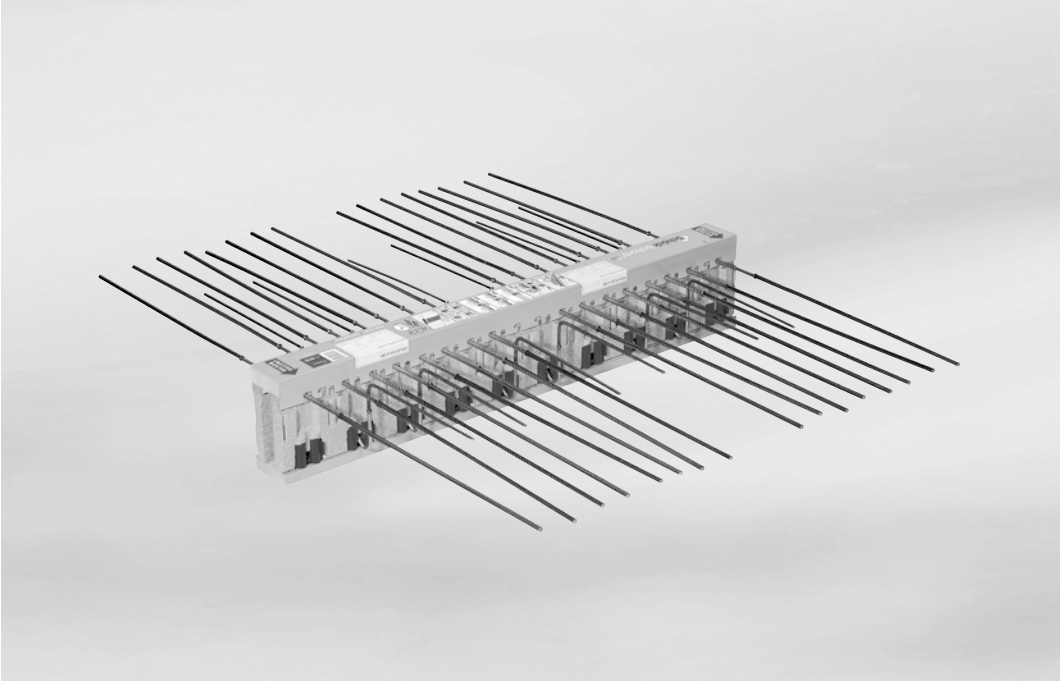

Schöck Isokorb® type K

Contents **Page**

Examples of element arrangements/Cross-sections	30
Plan views	31
Product variants/Designations	32
Product description	33
Capacity tables	34 - 35
Installation in conjunction with precast planks	36
Expansion joint/Example showing joint detail	37
Lap splice design	38 - 39
Example calculation/Notes	40
Deflection/Flexural slenderness	41
Method statement	42
Check list	43
Fire resistance	16 - 17

Schöck Isokorb® type K

Examples of element arrangements/Cross-sections

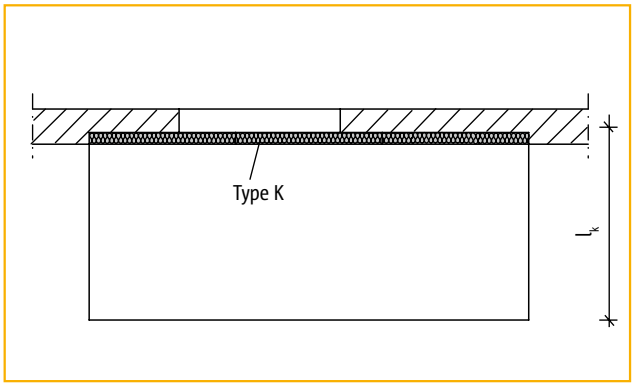

Figure 1: Free cantilever balcony

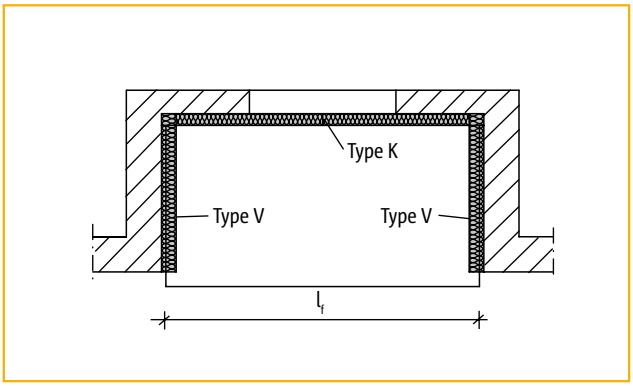

Figure 2: Balcony supported on three sides

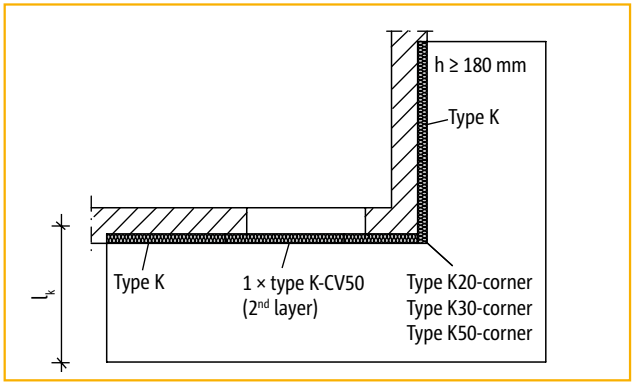

Figure 3: Balcony on an outside corner

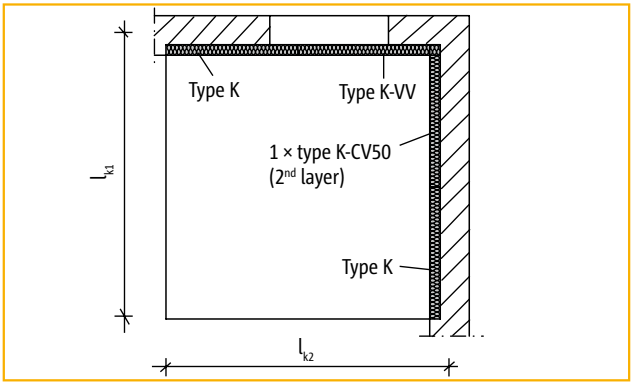

Figure 4: Balcony supported on two sides

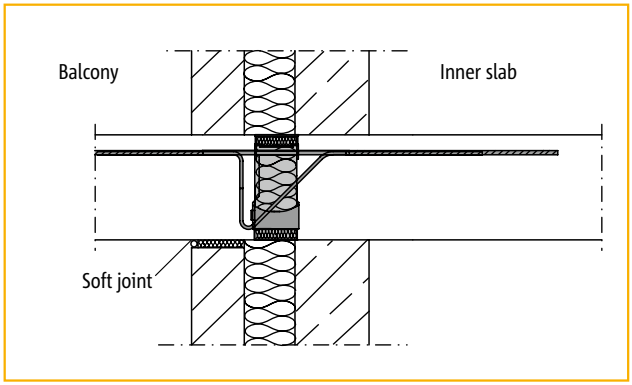

Figure 5: Cavity wall with a balcony at inner slab level

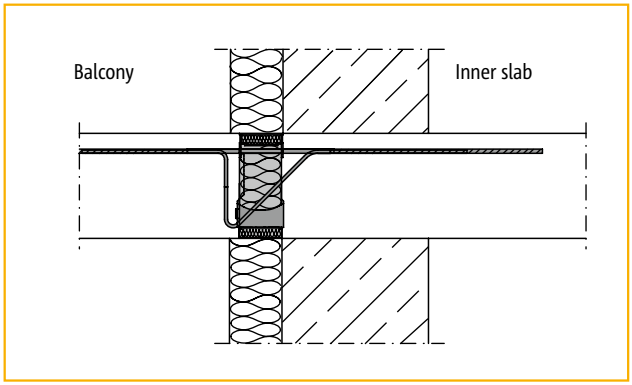

Figure 6: Brickwork with external insulation and a balcony at inner slab level

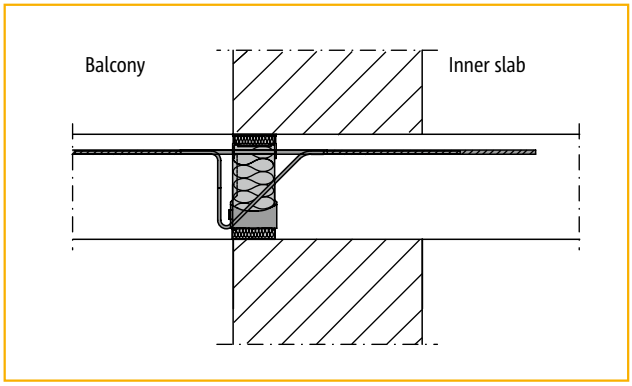

Figure 7: Single-leaf brickwork with a balcony at inner slab level

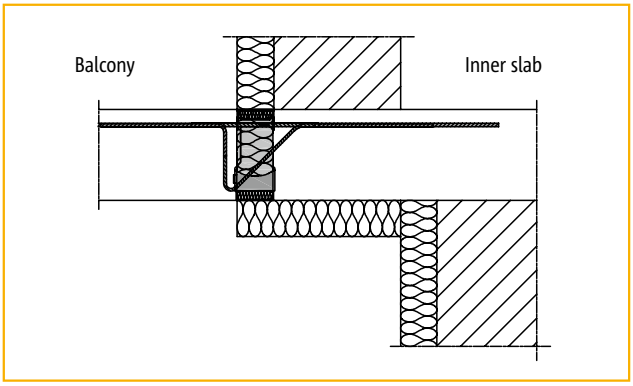

Figure 8: Balcony connection with an “indirect” support.

Schöck Isokorb® type K
Plan views

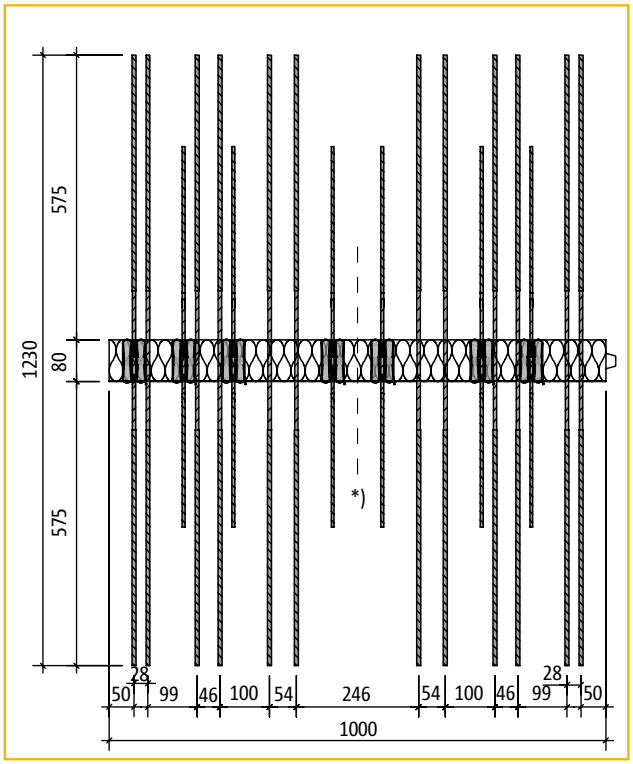

Plan view of Schöck Isokorb® type K30

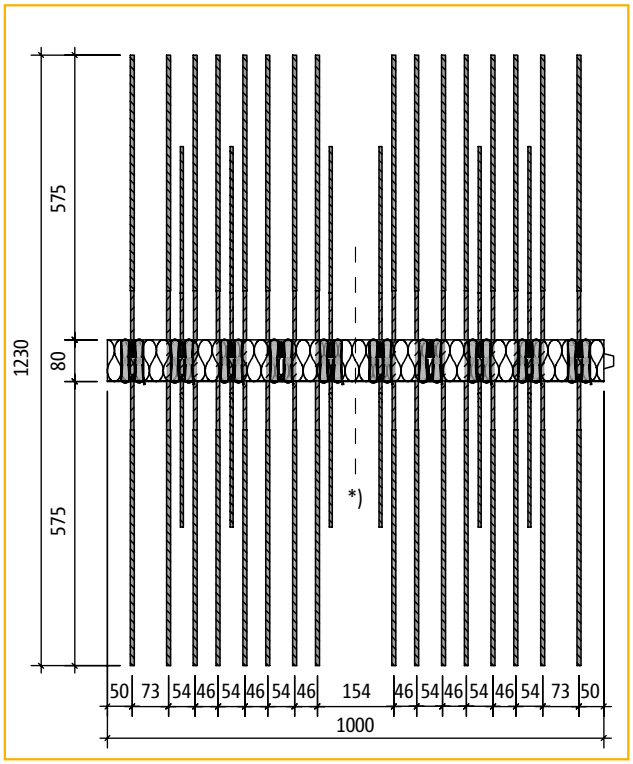

Plan view of Schöck Isokorb® type K50

*) On-site cutting possible at the shown position; this will result in a reduced load-bearing capacity.

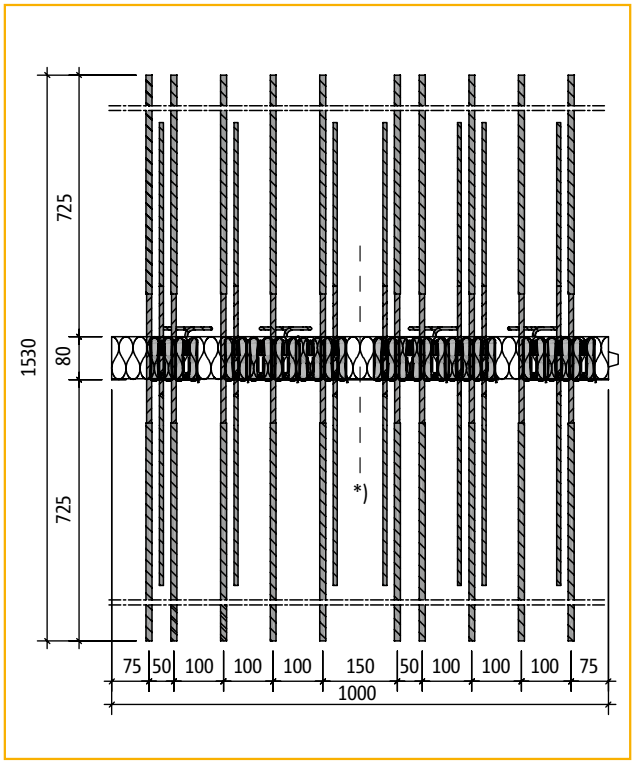

Plan view of Schöck Isokorb® type K60

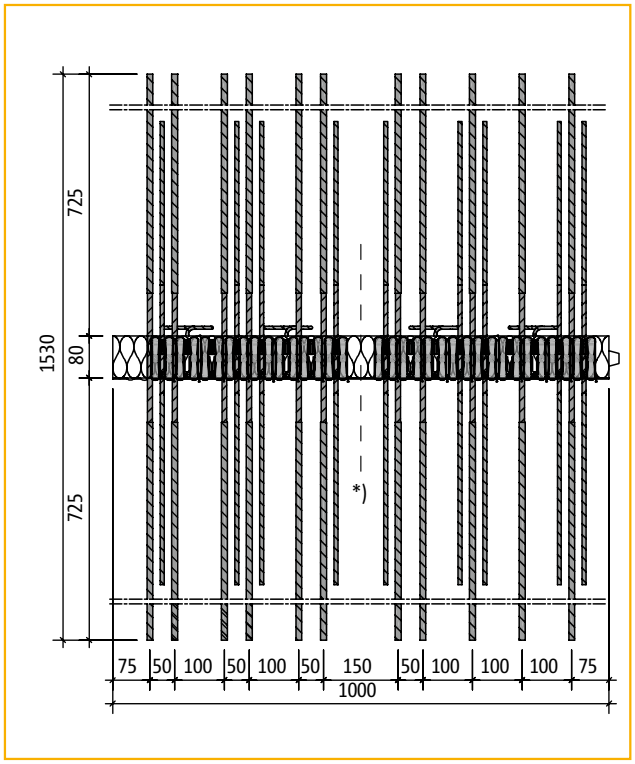

Plan view of Schöck Isokorb® type K80

Further plan views can be found at: www.schoeck.co.uk/en_gb/download/cad-drawings-3

Schöck Isokorb® type K
Product variants/Designations

Product selection

Basic type

K10 to K100 for transmission of bending moment and shear force

Shear force variant V6 = standard equipment, does not need to be listed in the type designation.

available from height 160 mm to 250 mm

Variants:

Shear force variant

e.g.: K50-CV35-**V8**... (= shear force bars 7 ø 8)
K50-CV35-**V10**... (= shear force bars 9 ø 8)
K50-CV35-**VV**... (= shear force bars 5 ø 8 positive + 4 ø 8 negative)

Concrete cover

e.g.: K50-**CV30**... (= installation dimensions for the tension bars CV = 30 mm)
K50-**CV35**.. (= installation dimensions for the tension bars CV = 35 mm)
K50-**CV50**... (≙ 2nd layer) (= installation dimensions for the tension bars CV = 50 mm)

Fire protection

e.g.: K50-CV35-...-**F90**

Designations used in planning documents

(structural calculations, specification documents, implementation plans, orders), e.g.

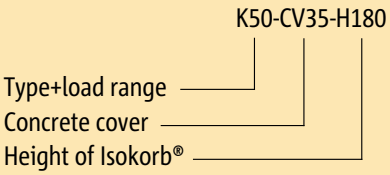

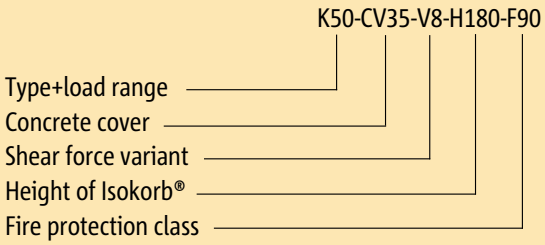

Special designs – Bending reinforcing steels

Some connection layouts cannot be implemented with the standard product options shown in this document. In such cases, special designs can be requested from the Design Support Department (see p. 3 for contact details). This also applies for example to additional requirements for prefabricated constructions (restrictions due to manufacturing or transport constraints) which may be met using coupler bars.

Individual reinforcing steel bars are bent in the precast plant as required. The Schöck Isokorb components are then assembled. This ensures compliance with regulations of the technical approval.

If Isokorb reinforcing steel is later bent or bent and straightened again on site in contravention of this, then compliance and monitoring of the relevant conditions lies outside the responsibility of Schöck Bauteile GmbH, and the product warranty expires.

Schöck Isokorb® type K
Product description

Schöck Isokorb® type	K10	K20	K30	K40	K50
Isokorb® length [m]	1.00	1.00	1.00	1.00	1.00
Tension bars	4 ø 8	8 ø 8	12 ø 8	13 ø 8	16 ø 8
Shear force bars V6	4 ø 6	4 ø 6	6 ø 6	6 ø 6	6 ø 6
Shear force bars V8	5 ø 8	5 ø 8	7 ø 8	7 ø 8	7 ø 8
Shear force bars V10	–	–	9 ø 8	9 ø 8	9 ø 8
Shear force bars VV	–	–	–	5 ø 8 + 4 ø 8	5 ø 8 + 4 ø 8
Pressure bearings (qty)	4 (5 at V8)	5	7 (9 at V10)	8 (9/11 at V10/VV)	10 (14 at VV)

Schöck Isokorb® type	K60	K70	K80	K90	K100
Isokorb® length [m]	1,00	1.00	1.00	1.00	1.00
Tension bars	10 ø 12	11 ø 12	11 ø 12	12 ø 12	13 ø 12
Shear force bars V6	7 ø 8	8 ø 8	–	–	–
Shear force bars V8	7 ø 8	8 ø 8	9 ø 8	9 ø 8	9 ø 8
Shear force bars V10	9 ø 8	9 ø 8	9 ø 8	9 ø 8	10 ø 8
Shear force bars VV	9 ø 8 + 4 ø 8	9 ø 8 + 4 ø 8	9 ø 8 + 4 ø 8	9 ø 8 + 4 ø 8	10 ø 8 + 4 ø 8
Pressure bearings (qty)	15 (17 at VV)	16(17 at VV)	17	18	18
Special hoops (qty)	4	4	4	4	4

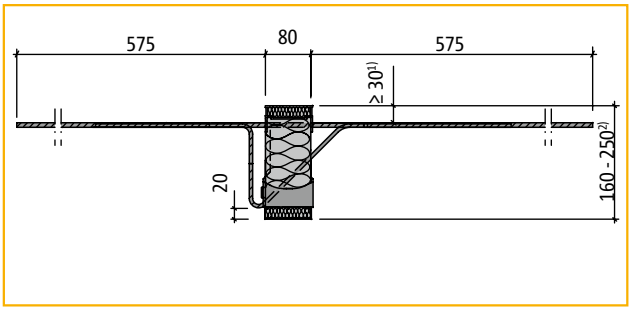

Schöck Isokorb® type K10 to K50

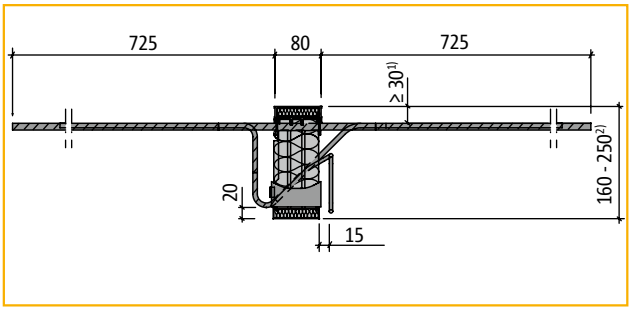

Schöck Isokorb® type K60 to K100

[1] 35 mm for CV35, 50 mm for CV50
[2] 180 - 250 mm for CV50

Schöck Isokorb® type K
Capacity tables for C25/30

Schöck Isokorb® type				K10	K20	K30	K40	K50
Design values for	Concrete cover CV [mm]			Concrete grade ≥ C25/30				
	CV30	CV35	CV50[1]	Moment capacity m_{Rd} [kNm/m]				
Height of Isokorb® H [mm]		160		–7.3	–14.3	–20.0	–22.8	–28.6
	160		180	–7.7	–15.1	–21.2	–24.2	–30.3
		170		–8.1	–16.0	–22.4	–25.6	–32.0
	170		190	–8.6	–16.9	–23.6	–27.0	–33.7
		180		–9.0	–17.7	–24.8	–28.4	–35.4
	180		200	–9.4	–18.6	–26.0	–29.7	–37.2
		190		–9.9	–19.4	–27.2	–31.1	–38.9
	190		210	–10.3	–20.3	–28.4	–32.5	–40.6
		200		–10.8	–21.2	–29.6	–33.9	–42.3
	200		220	–11.2	–22.0	–30.8	–35.2	–44.0
		210		–11.6	–22.9	–32.0	–36.6	–45.8
	210		230	–12.1	–23.7	–33.2	–38.0	–47.5
		220		–12.5	–24.6	–34.4	–39.4	–49.2
	220		240	–12.9	–25.5	–35.6	–40.7	–50.9
		230		–13.4	–26.3	–36.8	–42.1	–52.6
	230		250	–13.8	–27.2	–38.1	–43.5	–54.4
		240		–14.3	–28.0	–39.3	–44.9	–56.1
	240			–14.7	–28.9	–40.5	–46.2	–57.8
		250		–15.1	–29.8	–41.7	–47.6	–59.5
	250			–15.6	–30.6	–42.9	–49.0	–61.2
Shear force variant				Shear force capacity v_{Rd} [kN/m]				
	V6 (standard equipment)[2]			+28.0	+28.0	+42.0	+42.0	+42.0
	V8			+62.2	+62.2	+87.1	+87.1	+87.1
	V10			–	–	+112.0	+112.0	+112.0
	VV			–	–	–	+62.2/–49.8	+62.2/–49.8

Schöck Isokorb® type		K10	K20	K30	K40	K50
Product description	Isokorb® length [m]	1.00	1.00	1.00	1.00	1.00
	Tension bars	4 ø 8	8 ø 8	12 ø 8	13 ø 8	16 ø 8
	Shear force variant V6[2]	4 ø 6	4 ø 6	6 ø 6	6 ø 6	6 ø 6
	Shear force variant V8	5 ø 8	5 ø 8	7 ø 8	7 ø 8	7 ø 8
	Shear force variant V10	–	–	9 ø 8	9 ø 8	9 ø 8
	Shear force variant VV	–	–	–	5 ø 8 + 4 ø 8	5 ø 8 + 4 ø 8
	Pressure bearings (qty)	4 (5 at V8)	5	7 (9 at V10)	8 (9/11 at V10/VV)	10 (14 at VV)
	Special hoops (qty)	–	–	–	–	–

Member forces to be taken 100 mm off the slab edge.

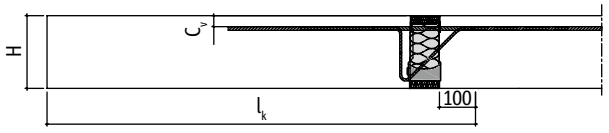

Schöck Isokorb® type **K50-CV35-V8-H180-F90**

- Type + load range
- Concrete cover in mm
- Shear force variant
- Height of Isokorb® in mm
- Fire protection class

[1] min. H = 180 mm for CV50

[2] Shear force variant V6 = standard variant up to K70

Schöck Isokorb® type K
Capacity tables for C25/30

Schöck Isokorb® type				K60	K70	K80	K90	K100
Design values for	Concrete cover CV [mm]			Concrete grade ≥ C25/30				≥ C30/37
	CV30	CV35	CV50[1]	Moment capacity m_{Rd} [kNm/m]				
Height of Isokorb® H [mm]		160		–38.6	–41.2	–42.6	–46.4	–50.2
	160		180	–41.0	–43.8	–45.2	–49.2	–53.3
		170		–43.4	–46.3	–47.9	–52.1	–56.4
	170		190	–45.8	–48.8	–50.5	–55.0	–59.4
		180		–48.2	–51.4	–53.1	–57.8	–62.5
	180		200	–50.6	–53.9	–55.7	–60.7	–65.6
		190		–53.0	–56.5	–58.4	–63.5	–68.7
	190		210	–55.3	–59.0	–61.0	–66.4	–71.8
		200		–57.7	–61.6	–63.6	–69.3	–74.9
	200		220	–60.1	–64.1	–66.3	–72.1	–78.0
		210		–62.5	–66.7	–68.9	–75.0	–81.1
	210		230	–64.9	–69.2	–71.5	–77.9	–84.2
		220		–67.3	–71.7	–74.2	–80.7	–87.3
	220		240	–69.6	–74.3	–76.8	–83.6	–90.4
		230		–72.0	–76.8	–79.4	–86.4	–93.5
	230		250	–74.4	–79.4	–82.0	–89.3	–96.6
		240		–76.8	–81.9	–84.7	–92.2	–99.7
	240			–79.2	–84.5	–87.3	–95.0	–102.8
		250		–81.6	–87.0	–89.9	–97.9	–105.9
	250			–84.0	–89.6	–92.6	–100.7	–109.0
Shear force variant				Shear force capacity v_{Rd} [kN/m]				
	V6 (standard equipment)[2]			+42.0	+42.0	–	–	–
	V8			+87.1	+87.1	+87.1	+87.1	+87.1
	V10			+112.0	+112.0	+112.0	+112.0	+112.0
	VV			+112.0/–49.8	+112.0/–49.8	+112.0/–49.8	+112.0/–49.8	+112.0/–49.8

Schöck Isokorb® type		K60	K70	K80	K90	K100
Product description	Isokorb® length [m]	1.00	1.00	1.00	1.00	1.00
	Tension bars	10 ø 12	11 ø 12	11 ø 12	12 ø 12	13 ø 12
	Shear force variant V6[2]	7 ø 8	8 ø 8	–	–	–
	Shear force variant V8	7 ø 8	8 ø 8	9 ø 8	9 ø 8	9 ø 8
	Shear force variant V10	9 ø 8	9 ø 8	9 ø 8	9 ø 8	10 ø 8
	Shear force variant VV	9 ø 8 + 4 ø 8	9 ø 8 + 4 ø 8	9 ø 8 + 4 ø 8	9 ø 8 + 4 ø 8	10 ø 8 + 4 ø 8
	Pressure bearings (qty)	15 (17 bei VV)	16 (17 bei VV)	17	18	18
	Special hoops (qty)	4	4	4	4	4

Notes:

- Concrete strength class for outside components at least C32/40 (see page 30).
- Concrete strength class C32/40 also required for inside slabs for use of K100.
- The verification of the shear force in slabs has to be provided by the structural designer according to EC2 clause 6.9..

[1] min. H = 180 mm for CV50

[2] Shear force variant V6 = standard variant up to K70

Schöck Isokorb® type K

Installation in conjunction with precast planks

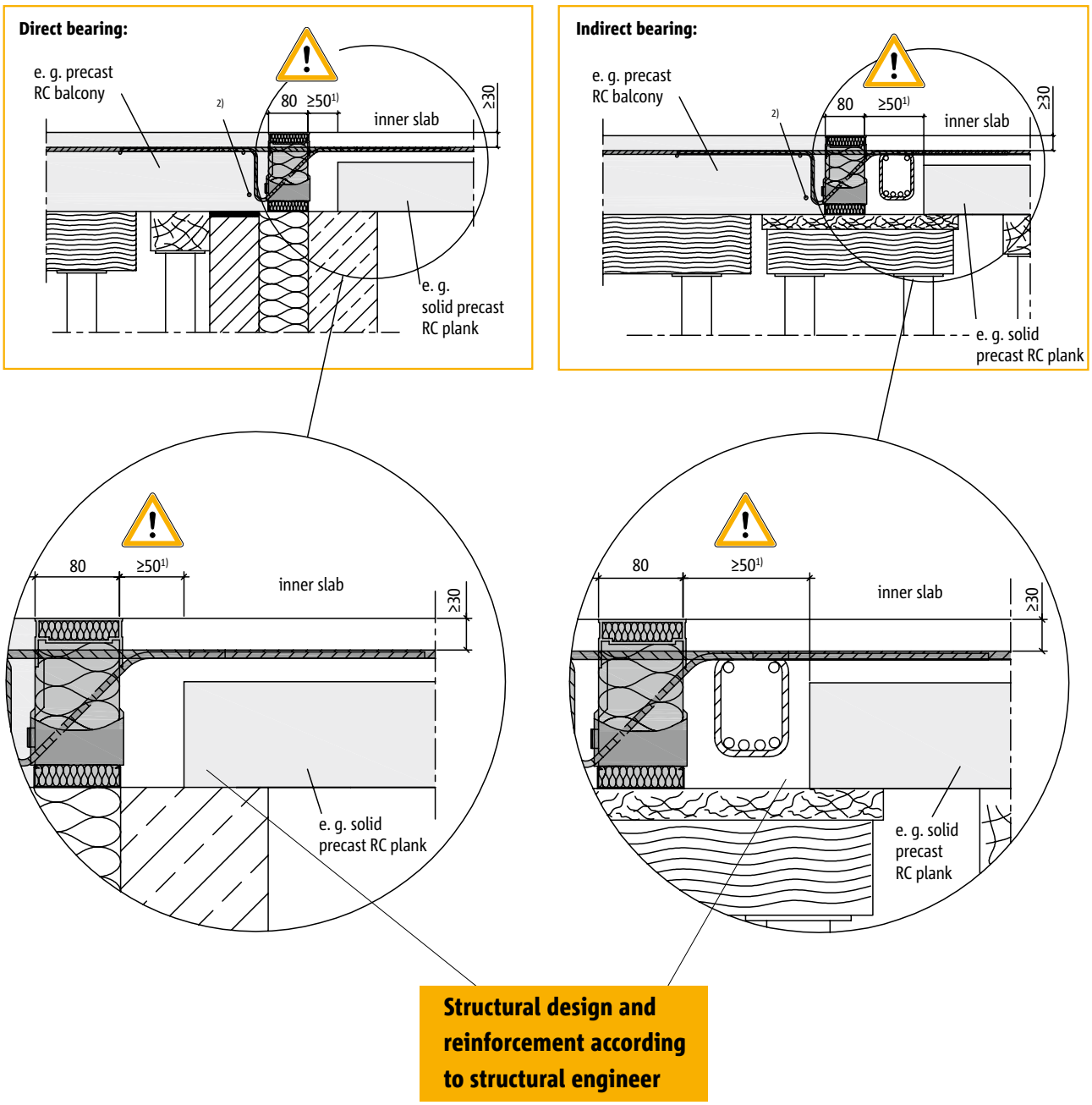

Notes

- A minimum cast-in-place strip of concrete between precast planks and Schöck Isokorb® is essential for structural reasons!
- Sufficient bond action between reinforced structural screed and precast planks has to be guaranteed!

[1)] A cast-in-place strip of concrete is essential for structural reasons.
[2)] Steel bar T8 along the pressure bearings

Schöck Isokorb® type K
Expansion joint/Example showing joint detail

External balcony slabs are subject to changes in length as a result of temperature fluctuations. Due to the lengthening and shortening of the balcony slabs, the load-bearing elements which run through the thermal insulation may be shifted by up to several millimetres. To insure that the bars can survive many thousands of temperature changes, the edge bending stresses determined in tests must not be exceeded. The HTE module compensates for the movements by individually inclining each separate pressure element.

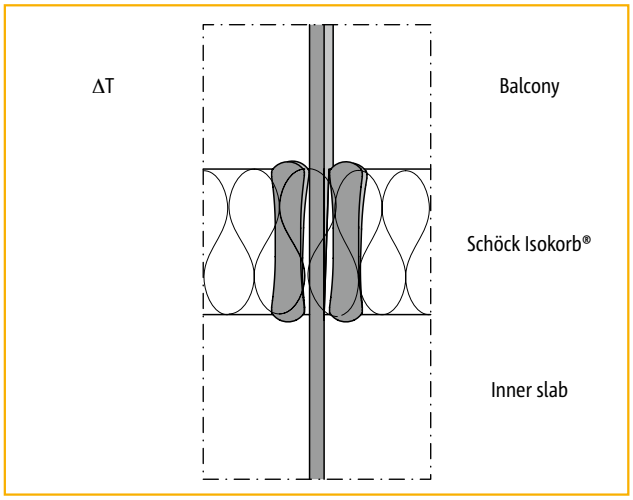

Deflection due to temperature difference

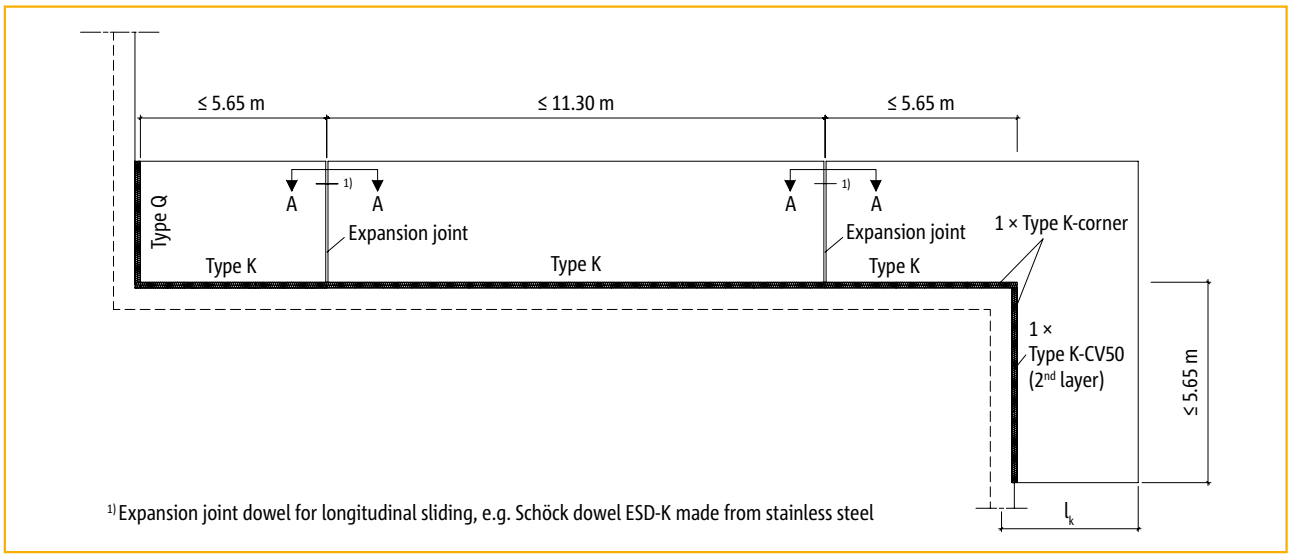

Expansion joint spacing

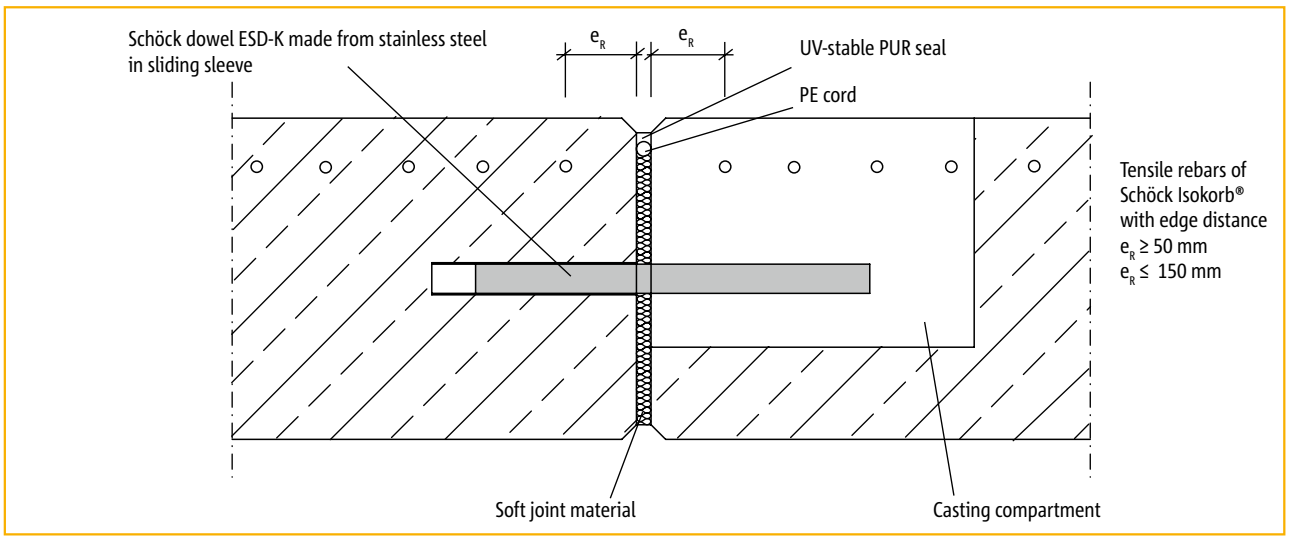

Example showing joint detail

Schöck Isokorb® type K
Lap splice design

Direct mounting

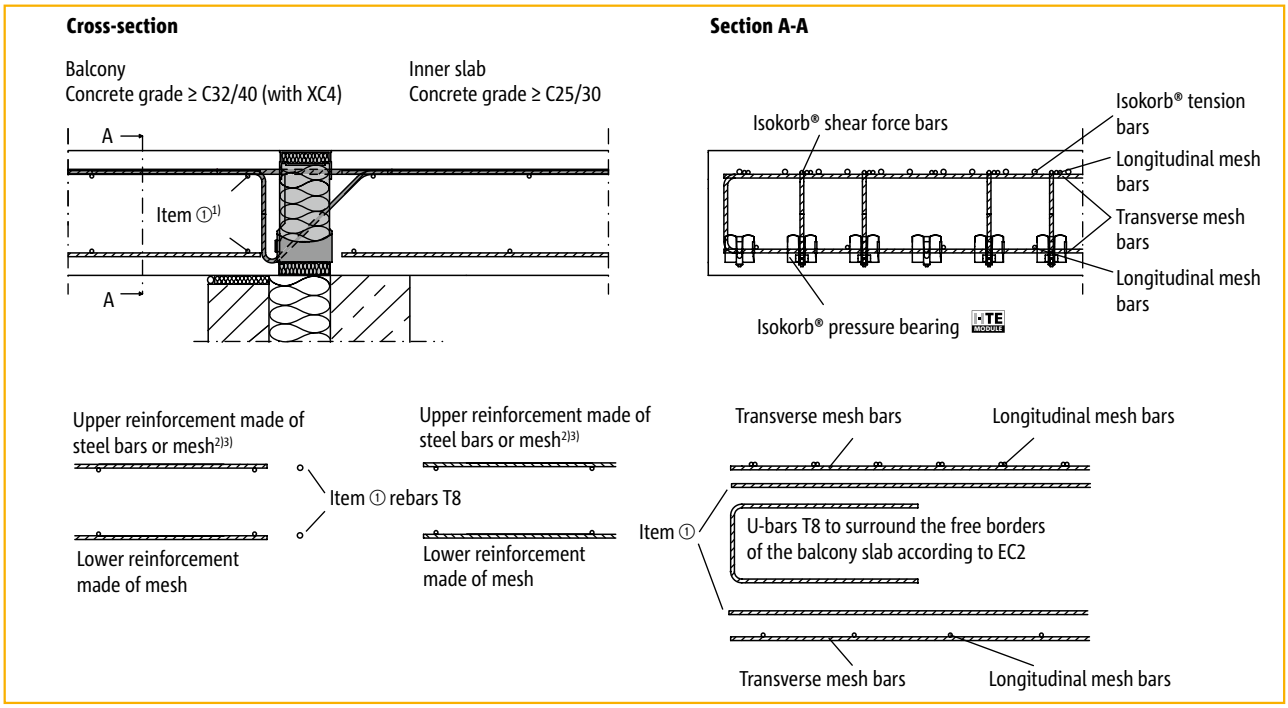

On-site additional reinforcement - direct mounting of inner slab border

Recommendations for lap splice design

Option A: Connections with steel reinforcement mesh to BS 4483
Option B: Connections with steel bars to BS 4449
Option C: Combined reinforcement of connections with steel reinforcement mesh to BS 4483 and steel bars to BS 4449. The transverse reinforcement of the chosen steel reinforcement mesh covers 1/5 of the longitudinal reinforcement.

Recommendations for the reinforcement of connections with Schöck Isokorb® at a load of 100 % of the maximum rated moment with C25/30, CV = 35 mm or CV = 50 mm

Schöck Isokorb® type	Reinforcement options for design of tension laps3)		
	Option A	Option B	Option C
K10	A193	T8@150 mm c/c	–
K20	B385	T10@150 mm c/c	A193 + T8@150 mm c/c
K30	B503	T10@125 mm c/c	A193 + T8@125 mm c/c
K40	B785	T10@100 mm c/c	A193 + T8@100 mm c/c
K50	B785	T10@90 mm c/c	A193 + T10@100 mm c/c
K60	–	T12@110 mm c/c	A252 + T10@90 mm c/c
K70	–	T12@100 mm c/c	A252 + T10@90 mm c/c
K80	–	T12@90 mm c/c	A252 + T12@100 mm c/c
K90	–	T12@80 mm c/c	A252 + T12@100 mm c/c
K100	–	T12@75 mm c/c	A385 + T12@100 mm c/c

1) The last transverse bar of the steel mesh must be positioned as closely as possible to the pressure bearing. Otherwise an T8 mm steel bar is required there.
2) The calculations of the upper reinforcement layer are performed according to the standard calculation methods for reinforced steel construction.
3) Alternative tension laps are also possible. The rules according to EC 2 apply to the determination of the lap length. It is permissible to reduce the required lap length with $A_{s,req}/A_{s,prov}$. For lapping (l_s) with the Schöck Isokorb®, a tension bar length of 530 mm can be used in the calculations for the types K10 to K50 and a tension bar length of 690 mm for the types K60 to K100.

Schöck Isokorb® type K
Lap splice design

Indirect mounting

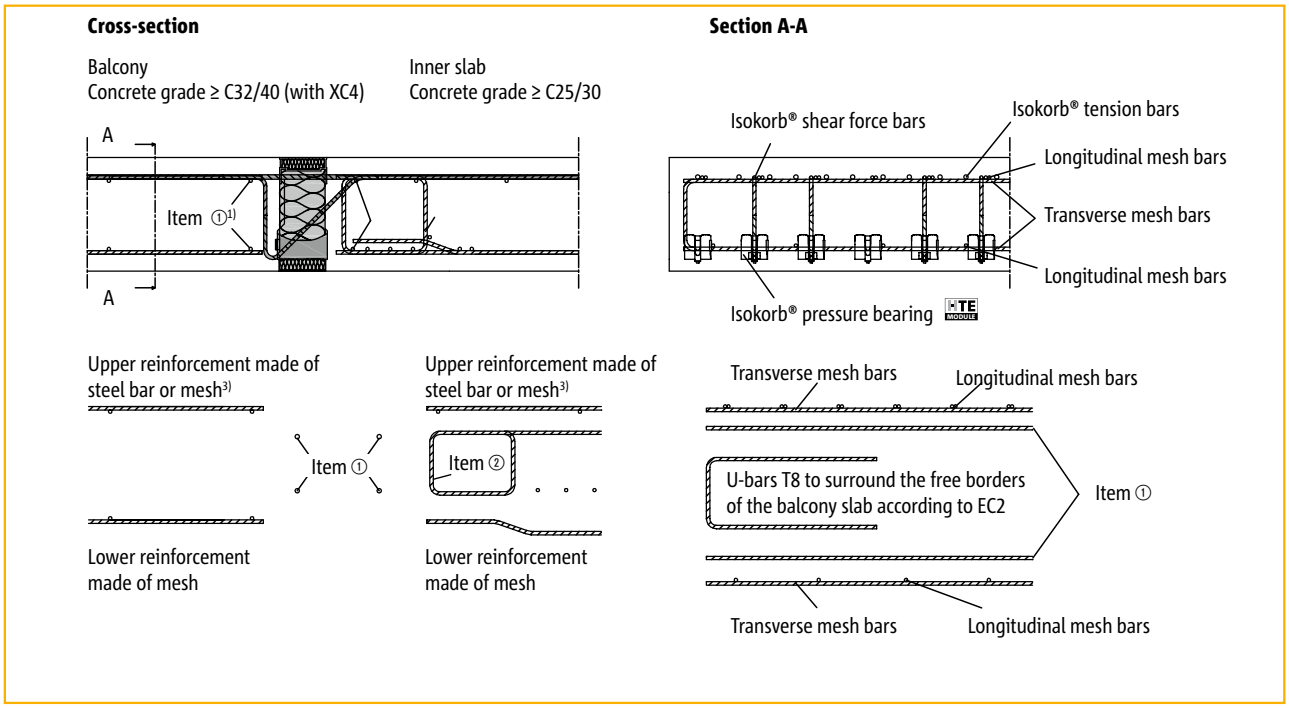

On-site additional reinforcement - indirect mounting of inner slab border

Recommendations for lap splice design

Option A: Connections with steel reinforcement mesh to BS 4483
Option B: Connections with steel bars to BS 4449
Option C: Combined reinforcement of connections with steel reinforcement mesh to BS 4483 and steel bars to BS 4449. The transverse reinforcement of the chosen steel reinforcement mesh covers 1/5 of the longitudinal reinforcement.

Recommendations for the reinforcement of connections with Schöck Isokorb® at a load of 100 % of the maximum rated moment with C25/30, CV = 30 mm or CV = 35 mm

Schöck Isokorb® type	Required hanger-reinforcement (Item. ②) [mm²/m]									
	Height of Isokorb® H [mm]									
	160	170	180	190	200	210	220	230	240	250
K10	113									
K20	113									
K30	113									
K40	115									
K50	143									
K60	251	266	278	290	300	309	317	325	332	338
K70	279	295	309	322	333	343	353	361	369	376
K80	307	325	340	354	366	377	388	397	406	413
K90	325	344	360	375	388	400	410	420	429	438
K100	352	372	389	405	419	432	444	455	464	474

1) The last transverse bar of the steel mesh must be positioned as closely as possible to the pressure bearing. Otherwise an T8 mm steel bar is required there.
2) The calculations of the upper reinforcement layer are performed according to the standard calculation methods for reinforced steel construction.
3) Alternative tension laps are also possible. The rules according to EC 2 apply to the determination of the lap length. It is permissible to reduce the required lap length with $A_{s,req}/A_{s,prov}$. For lapping (l_s) with the Schöck Isokorb®, a tension bar length of 530 mm can be used in the calculations for the types K10 to K50 and a tension bar length of 690 mm for the types K60 to K100.

Schöck Isokorb® type K
Example calculation/Notes

Example calculation

preset: Cantilever balcony

Member forces to be taken 100 mm off the slab edge.

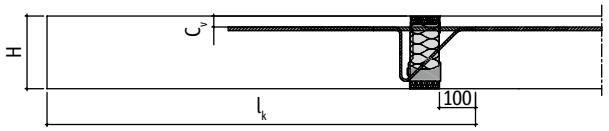

Geometry:	Length of projection	l_k	= 1.90 m
	Balcony slab thickness	H	= 180 mm
Load assumptions:	Balcony slab and coating	g	= 5.7 kN/m²
	Live load	q	= 4.0 kN/m²
	Edge load (balustrade)	g_R	= 1.5 kN/m
Exposure grade:	outside XC 4		
	inside XC 1		
Choice:	Concrete grade C25/30 for balcony, C32/40 for inner slab		
	Concrete cover CV = 35 mm for Isokorb®-tensile bars[1)]		

Member forces:

$m_{Ed} = -[(\gamma_G \times g + \gamma_q \times q) \times l_k^2/2 + \gamma_G \times g_R \times l_k)]$

$m_{Ed} = -[(1.35 \times 5.7 + 1.5 \times 4.0) \times 1.9^2/2 + 1.35 \times 1.5 \times 1.9)]$ = −28.6 kNm/m

$v_{Ed} = +(\gamma_G \times g + \gamma_q \times q) \times l_k + \gamma_G \times g_R$

$v_{Ed} = +(1.35 \times 5.7 + 1.5 \times 4.0) \times 1.9 + 1.35 \times 1.5$ = +28.1 kN/m

Choice: **Schöck Isokorb® type K50-CV35-H180**

m_{Rd}	= −35.4 kNm/m	(see page 34) > m_{Ed}
v_{Rd}	= +42.0 kN/m	(see page 34) > v_{Ed}
tan α	= 0.8	(see page 41)

Notes

- In the case of a combination of different concrete grades (e.g. balcony C32/40, inner slab C25/30), the weaker concrete is critical in terms of the Isokorb® calculations.
- The verification of the shear force in slabs has to be provided by the structural designer according to EC2 clause 6.9.
- Concrete grade for outside components at least C32/40 (see page 28).

Schöck Isokorb® type K
Deflection/Flexural slenderness

Deflection

The deflection factors shown in the table below result solely from the deformation of the Schöck Isokorb® element under 100 % exploitation of the steel stress of f_{yd} = 609 N/mm². The final precamber of the balcony slab formwork results from the calculation according to BS 8500, or according to EC 2, plus the precamber due to the Schöck Isokorb®.
The precamber of the balcony formwork to be specified by the engineer in charge. Note that deflection calculations, or precamber design respectively, should be taken into account while designing the drainage of the balcony.

Deflection (p) due to Schöck Isokorb®
$p = [\text{table value} \times l_k \times (m_{pd}/m_{Rd})] \times 10$ [mm]

l_k Length of projection [m]
m_{pd} Appropriate bending moment for calculation of the deflection p due to Schöck Isokorb®. The load combination to be applied here can be determined by the structural analysis engineer.
m_{Rd} Maximum rated moment of the Schöck Isokorb® type K (see pages 34 - 35).

Member forces to be taken 100 mm off the slab edge.

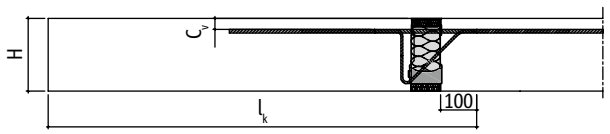

Schöck Isokorb® type		Deflection factor tan α [%] at height of Isokorb® H [mm]									
		160	170	180	190	200	210	220	230	240	250
K10 - K50	CV30/CV35	0,9	0,8	0,8	0,7	0,6	0,6	0,6	0,5	0,5	0,5
	CV50	–	–	0,9	0,8	0,8	0,7	0,6	0,6	0,6	0,5
K60 - K100	CV30/CV35	1,1	1, 0	0,9	0,8	0,7	0,7	0,6	0,6	0,6	0,5
	CV50	–	–	1,1	1,0	0,9	0,8	0,7	0,7	0,6	0,6

Example calculation

Choice: Concrete grade C32/40 for balcony
Concrete grade C25/30 for inner slab
Concrete cover CV = 35 mm

Geometry: Length of projection l_k = 1.90 m
Concrete slab thickness h = 180 mm

Load assumptions: Balcony slab and finish g = 5.7 kN/m²
Live load q = 4.0 kN/m²
Edge load (balustrade) g_R = 1.5 kN/m

Member forces: Bending moment m_{Ed} = –28.6 kNm/m
Shear force v_{Ed} = +28.1 kN/m

Choice: **Schöck Isokorb® type K50-CV35-H180**
m_{Rd} = –35.4 kNm/m (see page 34) > m_{Ed}
v_{Rd} = +42.0 kN/m (see page 34) > v_{Ed}
tan α = 0.8 (see table above)

Chosen load combination for deflection due to Schöck Isokorb®: g + q/2

$m_{pd} = -[(\gamma_G \times g + \gamma_Q \times q/2) \times l_k^2/2 + \gamma_G \times g_R \times l_k]$
$m_{pd} = -[(1.35 \times 5.7 + 1.5 \times 4/2) \times 1.9^2/2 + 1.35 \times 1.5 \times 1.9]$
$= -23.2$ kNm/m
$p = [\tan \alpha \times l_k \times (m_{pd}/m_{Rd})] \times 10$
$p = [0.8 \times 1.9 \times (23.2/35.4)] \times 10 = 10$ mm

For the limitation of flexable slenderness, we advise the following maximum cantilivered lengths max l_k [m]:

Concrete cover	Height of Schöck Isokorb® H [mm]									
	160	170	180	190	200	210	220	230	240	250
CV = 30 mm	1.81	1.95	2.10	2.25	2.39	2.54	2.68	2.83	2.98	3.12
CV = 35 mm	1.74	1.88	2.03	2.17	2.32	2.46	2.61	2.76	2.90	3.05
CV = 50 mm	1.52	1.66	1.81	1.95	2.10	2.25	2.39	2.54	2.68	2.83

Schöck Isokorb® type K
Method statement

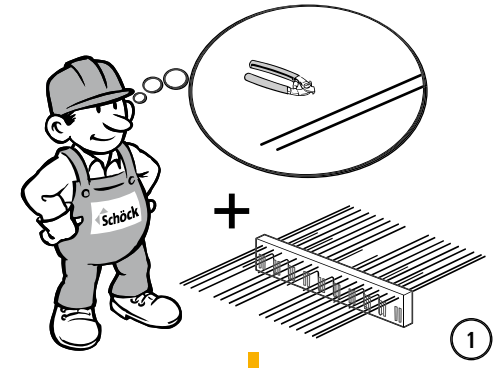

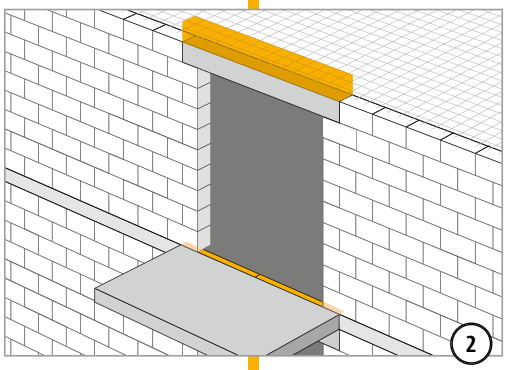

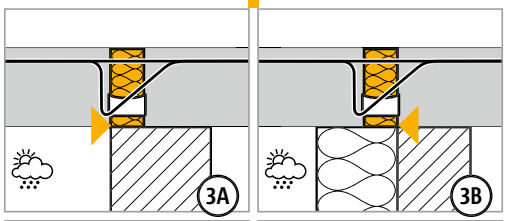

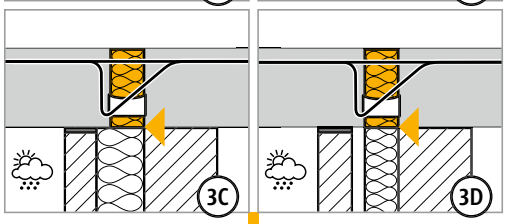

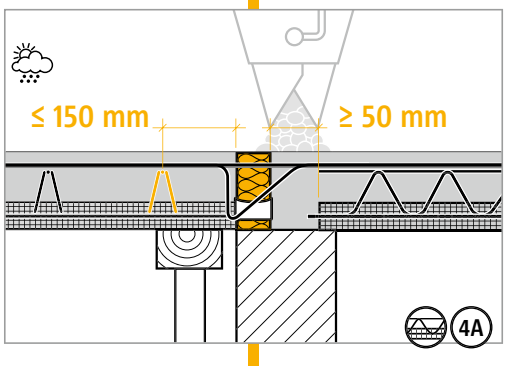

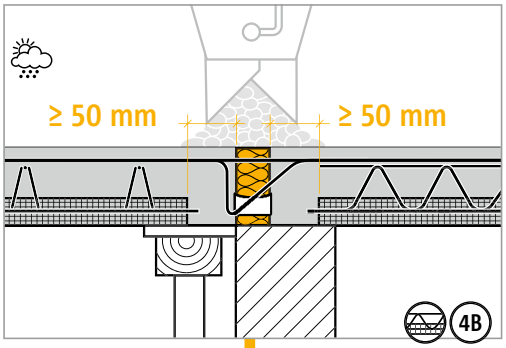

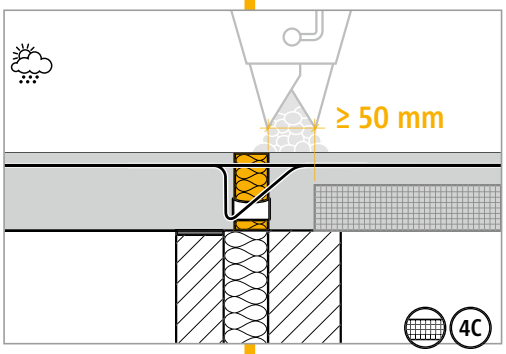

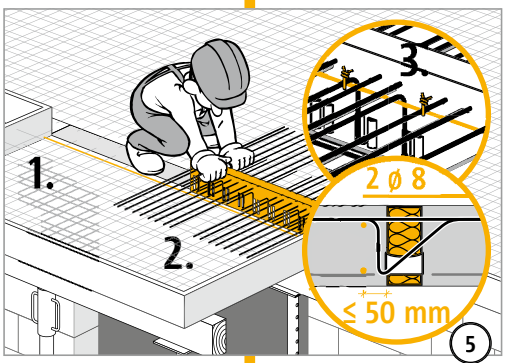

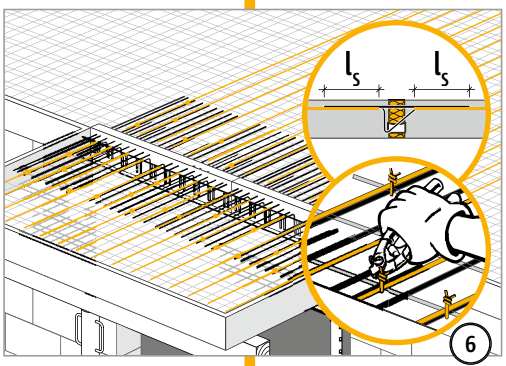

Schöck Isokorb®
Check list

- ☐ Have the member forces on the Isokorb® connection been determined at the design level?
- ☐ Was the cantilevered system length used in the process (Member forces to be taken 100 mm off the slab edge.)?
- ☐ Have the concrete cover and the appropriate concrete grade been taken into consideration according to the building regulations (see page 23)
- ☐ In case of precast planks will be used, is sufficient bond action between structural screed and precast planks guaranteed?
- ☐ Have the maximum permitted distances between expansion joints (= expansion joint spacing) been taken into account?
- ☐ Has the required lap splice reinforcement been designed for balcony side and for inner slab side?
- ☐ Do the calculations of the deformation of the overall structure take into account the additional deformation due to the Schöck Isokorb®?
- ☐ Has the drainage direction been taken into account in the resulting precamber specification for the balcony formwork?
- ☐ Has the relevant bearing limit of the slab been checked for Shear forces according to EC2 clause 6.9.?
- ☐ In case of a corner balcony, have the minimum slab thickness (≥ 180 mm) and the required 2nd layer (CV50) been taken into account?
- ☐ Have the fire safety requirements been clarified, and are they reflected in the chosen type designation (e.g. -F90)?
- ☐ In the case of F90 elements, has the increased minimum slab thickness been taken into account (type Q, type V)?